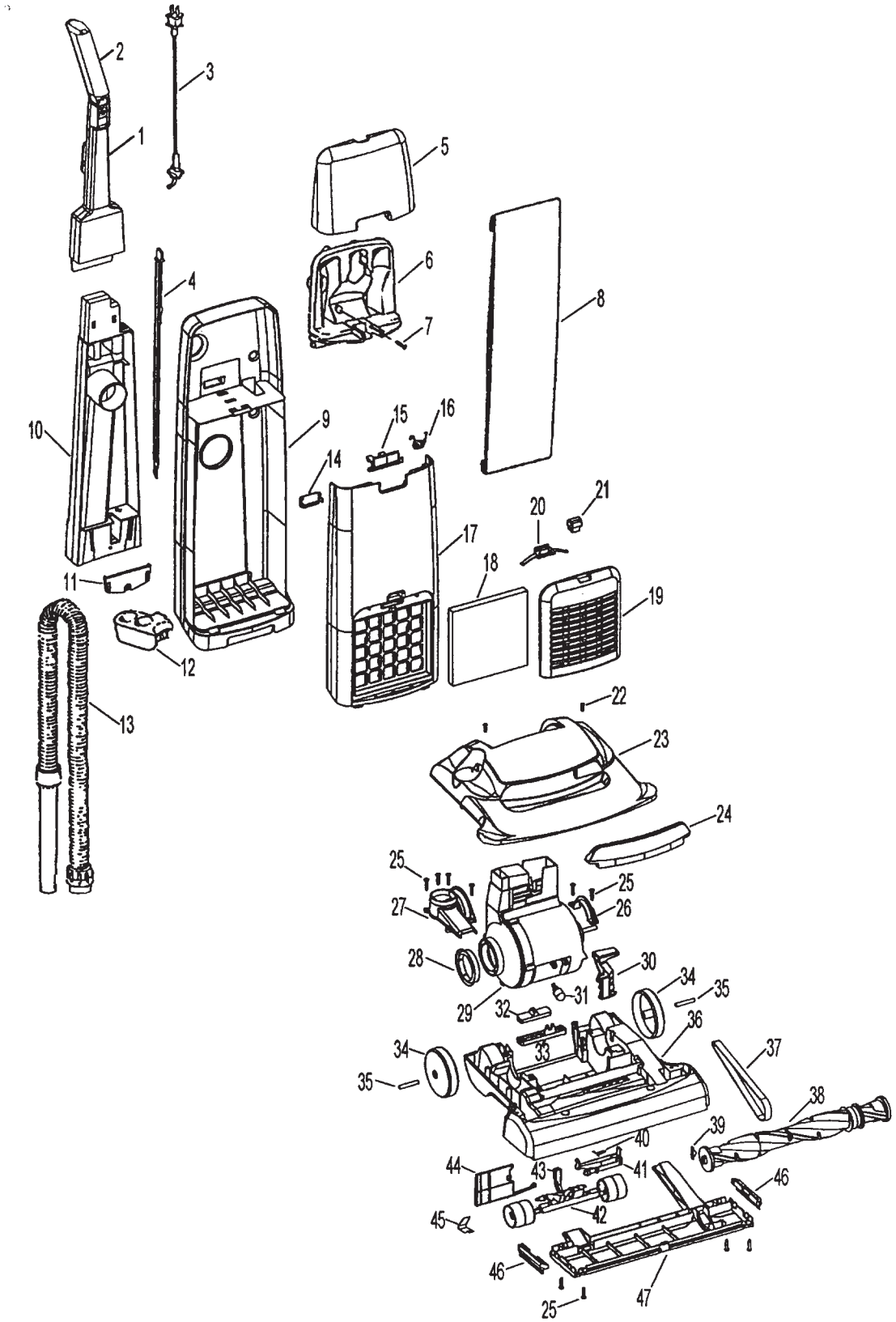
1
2
3
4
5
6
7
8
9
10
11
12
13
14
15
16
17
18
19
20
21
22
23
24
25
26
27
28
29
30
31
32
33
34
35
36
37
38
39
40
41
42
43
44
45
46
47

| Ref. No. | Part No. | Description |
|---|---|---|
| 1 | 48663209 | Upper Handle Assembly |
| 2 | 37911078 | Handle Cap |
| 3 | 46388034 | Cord Assembly - 50 ft. |
| 4 | 38458046 | Switch Rod - Lower |
| 5 | N/A | Tool Door |
| 6 | 36433133 | Tool Holder |
| 7 | 21447232 | * Screw - Tool Holder |
| 8 | 4010100Z | T/A Bag 3 pk. Microfiltration |
| | 43667053 | Cloth - Reusable Bag |
| 9 | 37255021 | Bag Housing |
| 10. | 39464025 | Lower Handle |
| 11 | 36425081 | Bag Housing Bracket |
| 12 | 36433113 | Lower Hose Support |
| 13 | 43434101 | Hose Assembly |
| 14 | 37258051 | Latch Plug |
| 15 | 36151013 | Bag Door Latch |
| 16 | 38355008 | Spring |
| 17 | 37254138 | Bag Hsg. Door |
| 18 | 40110003 | Final Filter |
| 19 | 37257246 | Filter Retainer |
| 20 | 36151025 | Latch |
| 21 | 38426090 | + Latch Button |
| 22 | 21447218 | * Screw - Hood (4) |
| 23 | Note: All hoods include item 24 | |
| | 42252A62 | Hood - Models before 10/01 |
| | 42252B36 | Hood - Models after 10/01 |
| 24 | 39383108 | Lens - Models before 10/01 |
| | 39383112 | Panel - Models after 10/01 |
| 25 | 21447217 | * Screw (10) |
| 26 | 36131090 | Motor Retainer Cap - LH |
| 27 | 38656033 | Duct Cover |
| 28 | 38784016 | Seal |

| Ref. No. | Part No. | Description |
|---|---|---|
| 29 | 43576204 | Motor - Models before 10/01 |
| | 43576215 | Motor - Models after 10/01 |
| 30 | 38458053 | Handle Release Lever |
| 31 | 27313101 | Bulb - Models before 10/01 |
| 32 | 38567014 | Indicator Knob |
| 33 | 38567027 | Cam Actuator |
| 34 | 38522011 | Rear Wheel (2) |
| 35 | 31531008 | Rear Wheel Shaft (2) |
| 36 | 37241158 | Main Body (Inc. items 34, 35) |
| 37 | 38528027 | + Agitator Belt |
| | 38528040 | Agitator Belt |
| 38 | 48414061 | Agitator Assembly |
| 39 | 13261AY | * Rug Nozzle Rib Shoe |
| 40 | 38351012 | Spring |
| 41 | 38563013 | Nozzle Height Adj. Cam |
| 42 | 43248058 | Front Wheel Assembly |
| 43 | 38452089 | + Lever - Use 43248052 Wheel Assembly |
| 44 | 38718005 | Valve Gate |
| 45 | 34572002 | Cam Actuator Spring |
| 46 | 39511006 | Litter Picker (2) |
| 47 | 37245035 | Bottomplate |

**Items not Illustrated**

| | |
|---|---|
| 40201085 | Nut and Bolt Assem. (Handle) |
| 39442043 | Cord Wrap (Upper Handle) |

**Tools**

| | |
|---|---|
| 38634078 | Extension Tube |
| 38614036 | Furniture Nozzle |
| 38617026 | Crevice Tool |
| 43414146 | Dusting Brush |

**Packaging**

| | |
|---|---|
| 56511A58 | Owner Manual |
| 58185206 | Carton |
| 58366099 | Hard Bag Support |
| 58369067 | + Cleaner Support |